RF Conector
1.6/5.6(m)90° solder-clamp ST-214 (300019)

Product Specification
ET-v02 - 10/13/21

Features

Connector Type	1.6 / 5.6
Type of contact	Male
Mounting angle	Right angle
Mounting of type	solder-clamp
Durability (Cyles)	≥ 500

Electrical properties

Impedance (Ω)	75 ± 1
Frequency range (GHz)	DC~1
Inner contact resistance (m Ω)	≤ 4
Outer contact resistance (m Ω)	≤ 2
Insulation resistance (MΩ▪km)	≥ 1000
Dielectric withstanding voltage, at sea level (V, RMS, 50Hz)	≥ 1000

Material properties

Inner conductor	Brass alloy plated with gold
Outer conductor	Brass alloy plated with tri-Alloy
Insulator	PTFE
Other	Brass alloy plated with silver

Environmental Properties

Temperature range (^{o}C)	- 40 + 85
Water proof	≤ 1.5
2011/65EU(ROHS)	Compliant

Outline Drawing

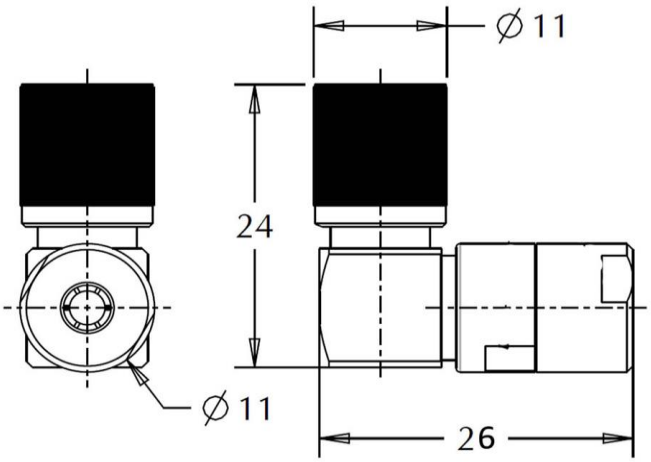

Recommend cable stripping (mm)

A	4,5
B	10
C	14

Recommended mounting

Ferrule	Clamp
Pin	Solder

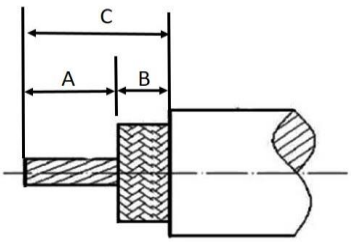

* MCC reserves the right to make the changes conridered necessary in this document.